ALL MATERIALS TO ARCH. SPECS.

5 KNUCKLE HINGES
3MM EDGEBANDING
FLUSH MOUNT HOOD PULL
(HARDWARE & MATERIAL OPTIONS AVAILABLE)

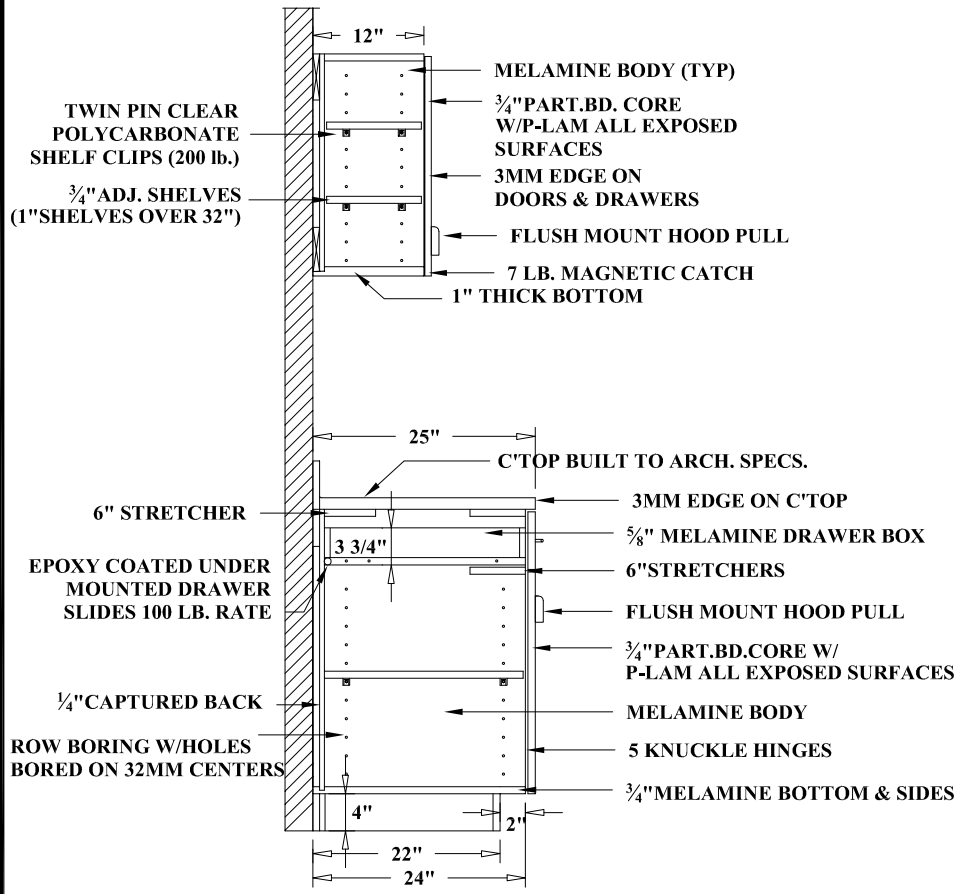

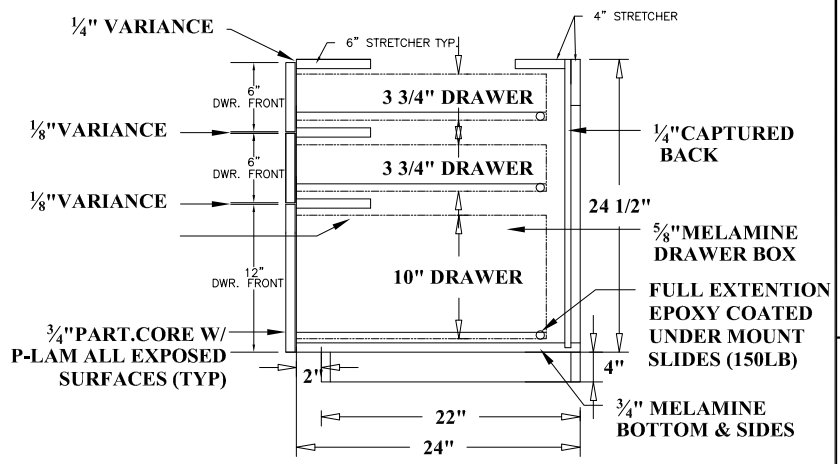

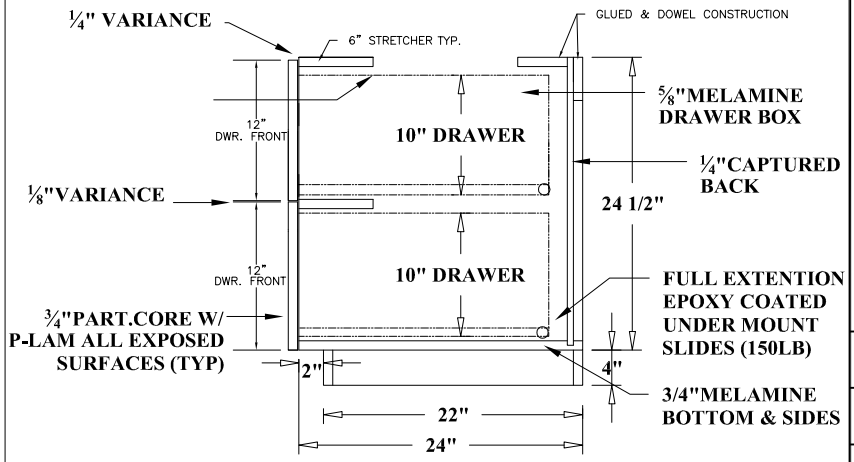

EDUCATION CASEWORK

152 COUNTY ROAD 1297
CULLMAN, ALABAMA 35058
PHONE: 256-739-1958
FAX: 256-734-1717

PERFECTION CABINETRY
TYPICAL.CABINET.SECTIONS
EDUCATION

PROJECT#	SECTIONS
DATE:	20010-11
REVISIONS:	
REV1	
REV2	
REV3	
DRAWN BY:	DMG
DRAWING#	SECTIONS
PAGE#	S.1